PLAIN SPLIT CLAMP

A

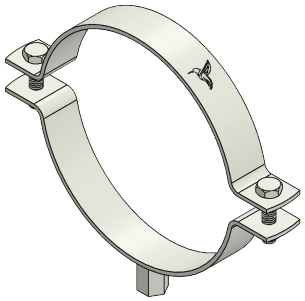

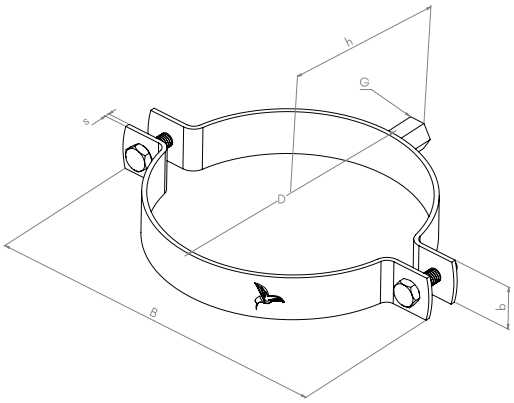

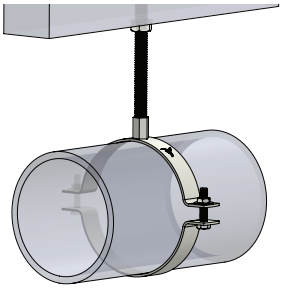

Material: Carbon Steel.
Coating: Zinc Plating ≥ 5 µm (ASTM B 633/EN ISO 2081)
Hot Dip Galvanized (ASTM A153/EN ISO 1461)
Armor X 20
Standards Compliance: Meets MSS SP-58 for pipe supports.

High Load Capacity: Reinforced lock bolts ensure reliable support.
Corrosion Resistance: Different coating options make it suitable for indoor and outdoor & Coastal environments.
Versatility: Suitable for horizontal and vertical applications, compatible with rubber support inserts for chilled water pipes.
Easy Installation: Large opening angle with anti-loss screws for efficient setup.

Part No.	D (mm)	Size (inch)	DN	Dia (mm)	G	B (mm)	H (mm)	h (mm)	b x s (mm)	Rec. Load KG	Qty Pack
IC12500015	15-19	3/8	10	15	M8/M10	59	30	23	20 x 2.0	200	600
IC12500022	20-25	1/2	15	22	M8/M10	66	37	26	20 x 2.0	200	500
IC12500028	26-30	3/4	20	28	M8/M10	72	43	29	20 x 2.0	200	400
IC12500035	32-36	1	25	35	M8/M10	79	50	33	20 x 2.0	200	350
IC12500042	38-43	1 1/4	32	42	M8/M10	86	57	36	20 x 2.0	200	300
IC12500048	47-51	1 1/2	40	48	M8/M10	92	63	39	20 x 2.0	200	250
IC12500054	53-58	-	-	54	M8/M10	98	69	42	20 x 2.0	200	250
IC12500060	60-64	2	50	60	M8/M10	104	75	45	20 x 2.0	200	200
IC12500063	63-66	-	-	63	M8/M10	108	82	47	20 x 2.0	200	200
IC12500070	68-72	-	-	70	M8/M10	114	85	50	20 x 2.0	200	150
IC12500075	74-80	2 1/2	65	75	M8/M10	119	90	53	20 x 2.0	200	150
IC12500083	81-86	-	-	83	M8/M10	127	98	57	20 x 2.0	200	125
IC12500090	87-92	3	80	90	M8/M10	134	105	60	20 x 2.0	200	125
IC12500100	99-105	3 1/2	-	100	M8/M10	144	115	65	20 x 2.0	200	100
IC12500110	107-112	-	-	110	M8/M10	154	125	70	20 x 2.0	200	100
IC12500115	113-118	4	100	115	M8/M10	159	130	73	20 x 2.0	200	90
IC12500125	125-130	-	-	125	M8/M10	169	140	78	20 x 2.0	200	75
IC12500133	131-137	-	-	133	M8/M10	177	148	82	20 x 2.0	200	75
IC12500140	138-142	5	125	140	M8/M10	184	155	85	20 x 2.5	300	75
IC12500150	148-153	-	-	150	M8/M10	194	165	90	20 x 2.5	300	60
IC12500160	159-166	-	-	160	M8/M10	204	175	95	25 x 2.5	300	60
IC12500168	168-172	6	150	168	M8/M10	212	183	99	25 x 2.5	300	60
IC12500200	200-212	-	-	200	M8/M10	244	215	115	25 x 2.5	300	60
IC12500220	215-220	8	200	220	M8/M10	264	235	125	25 x 2.5	300	50
IC12500250	249-260	-	-	250	M8/M10	294	265	140	25 x 2.5	300	50
IC12500315	313-318	-	-	315	M8/M10	359	330	173	25 x 2.5	300	40

Note: Hot-dip galvanized and stainless steel options are available on request.