RUBBER LINED SPLIT CLAMP

A



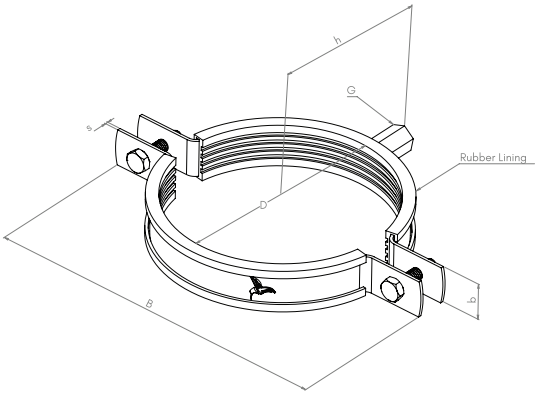

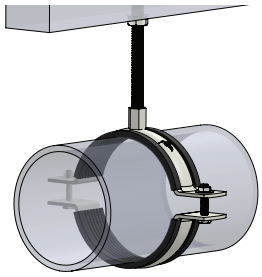

Material: Carbon Steel with EPDM Rubber Lining.
Coating: Zinc Plating ≥ 5 µm (ASTM B 633/EN ISO 2081)
Hot Dip Galvanized (ASTM A153/EN ISO 1461)
Armor X 20
Standards Compliance: Meets MSS SP-58 for pipe supports.

High Load Capacity: Reinforced lock bolts ensure reliable support.
Corrosion Resistance: Different coating options make it suitable for indoor and outdoor & Coastal environments.
Versatility: Suitable for horizontal and vertical applications, compatible with rubber support inserts for chilled water pipes.
Easy Installation: Large opening angle with anti-loss screws for efficient setup.

NOISE REDUCING
Tested in accordance with ISO 3822-1

Part No.	D (mm)	Size (inch)	DN	Dia (mm)	G	B (mm)	H (mm)	h (mm)	b x s (mm)	Rec. Load KG	Qty Pack
IC11500015	15-19	3/8	10	15	M8/M10	60	36	26	19 x 1.2	150	450
IC11500022	20-25	1/2	15	22	M8/M10	65	43	29	19 x 1.2	150	400
IC11500028	26-30	3/4	20	28	M8/M10	70	50	32	19 x 1.2	150	350
IC11500035	32-36	1	25	35	M8/M10	85	56	36	19 x 1.2	150	300
IC11500042	38-43	1 1/4	32	42	M8/M10	92	63	39	19 x 1.2	150	250
IC11500048	47-51	1 1/2	40	48	M8/M10	98	72	42	19 x 1.2	150	200
IC11500054	53-58	-	-	54	M8/M10	104	75	45	19 x 1.2	150	200
IC11500060	60-64	2	50	60	M8/M10	110	81	48	19 x 1.2	150	125
IC11500063	63-66	-	-	63	M8/M10	115	88	51	19 x 1.2	150	125
IC11500070	68-72	-	-	70	M8/M10	120	91	53	19 x 1.2	150	125
IC11500075	74-80	2 1/2	65	75	M8/M10	125	96	56	19 x 1.5	200	100
IC11500083	81-86	-	-	83	M8/M10	139	108	60	19 x 1.5	200	100
IC11500090	87-92	3	80	90	M8/M10	146	111	63	19 x 1.5	200	100
IC11500100	99-105	3 1/2	-	100	M8/M10	156	121	68	19 x 1.5	200	75
IC11500110	107-112	-	-	110	M8/M10	166	131	73	19 x 1.5	200	75
IC11500115	113-118	4	100	115	M8/M10	171	136	76	19 x 1.5	200	70
IC11500125	125-130	-	-	125	M8/M10	181	146	81	19 x 2.0	200	70
IC11500133	131-137	-	-	133	M8/M10	184	154	85	19 x 2.0	200	50
IC11500140	138-142	5	125	140	M8/M10	196	161	88	19 x 2.0	200	50
IC11500150	148-153	-	-	150	M8/M10	206	171	93	19 x 2.0	200	50
IC11500160	159-166	-	-	160	M8/M10	216	181	98	19 x 2.0	200	50
IC11500168	168-172	6	150	168	M8/M10	224	189	102	19 x 2.0	200	50
IC11500200	200-212	-	-	200	M8/M10	256	221	118	19 x 2.0	300	50
IC11500220	215-220	8	200	220	M8/M10	276	241	128	19 x 2.0	300	40
IC11500250	249-260	-	-	250	M8/M10	306	271	143	19 x 2.0	300	40
IC11500315	313-318	-	-	315	M8/M10	371	336	176	19 x 2.0	300	25

Note: Hot-dip galvanized and stainless steel options are available on request.