RUBBER LINED TWO BOLT CLAMP

A

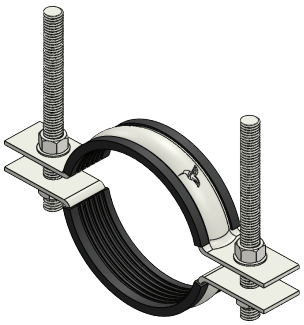

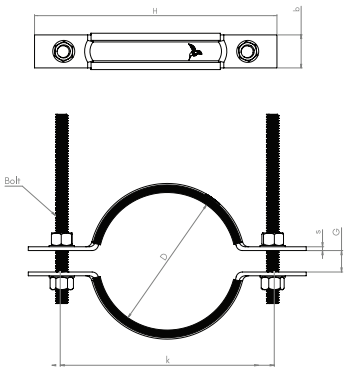

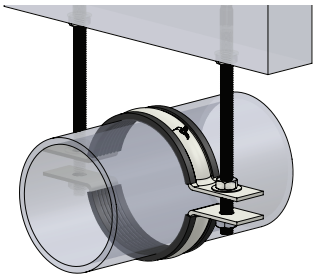

Material: Carbon Steel with EPDM Rubber Lining.
Coating: Zinc Plating ≥ 5 µm (ASTM B 633/EN ISO 2081)
Hot Dip Galvanized (ASTM A153/EN ISO 1461)
Armor X 20
Standards Compliance: Meets MSS SP-58 for pipe supports.

High Load Capacity: Reinforced lock bolts ensure reliable support.
Corrosion Resistance: Different coating options make it suitable for indoor and outdoor & Coastal environments.
Versatility: Suitable for horizontal and vertical applications, compatible with rubber support inserts for chilled water pipes.
Easy Installation: Large opening angle with anti-loss screws for efficient setup.

NOISE REDUCING
Tested in accordance with ISO 3822-1

Part No.	D (mm)	Size (inch)	BOLT (mm)	H (mm)	b x s (mm)	k (mm)	C (mm)	Rec. Load KG	Qty Pack
IC11506022	22	1/2	M10	97	25 x 5.0	68	12	170	60
IC11506028	28	3/4	M10	105	25 x 5.0	76	12	170	60
IC11506035	35	1	M10	113	25 x 5.0	84	12	170	50
IC11506040	40	1 1/4	M10	121	25 x 5.0	92	12	170	50
IC11506048	48	1 1/2	M10	127	25 x 5.0	98	12	170	40
IC11506060	60	2	M10	156	25 x 5.0	116	16	170	35
IC11506075	75	2 1/2	M12	182	25 x 6.0	142	16	400	35
IC11506090	90	3	M12	196	25 x 6.0	156	16	400	30
IC11506100	100	3 1/2	M12	208	25 x 6.0	168	16	400	30
IC11506115	115	4	M12	220	25 x 6.0	180	19	400	25
IC11506140	140	5	M16	252	40 x 6.0	214	19	600	20
IC11506168	168	6	M16	290	40 x 6.0	242	22	600	15
IC11506220	220	8	M16	352	40 x 6.0	152	25	1100	10
IC11506273	273	10	M16	406	50 x 9.0	358	25	1200	5
IC11506323	323	12	M20	490	50 x 12.0	430	25	1500	4
IC11506355	355	14	M20	546	50 x 12.0	480	28	1500	4
IC11506406	406	16	M20	597	60 x 16.0	532	28	2200	2
IC11506457	457	18	M20	686	60 x 16.0	610	32	2200	2
IC11506508	508	20	M20	776	60 x 16.0	680	35	2200	1
IC11506610	610	24	M20	876	60 x 16.0	780	42	2200	1

Note: Hot-dip galvanized and stainless steel options are available on request.