TWO BOLT RISER CLAMP

A

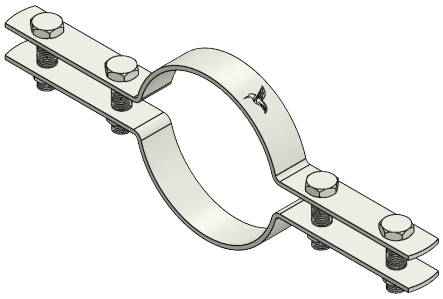

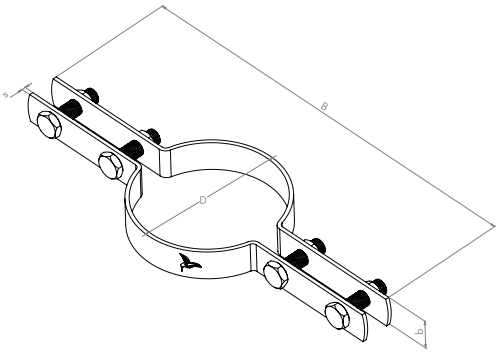

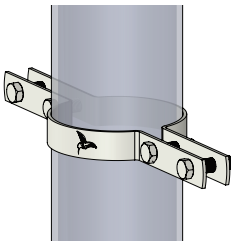

Material: Carbon Steel.
Coating: Zinc Plating ≥ 5 µm (ASTM B 633/EN ISO 2081)
Hot Dip Galvanized (ASTM A153/EN ISO 1461)
Armor X 20
Standards Compliance: Meets MSS SP-58 for pipe supports.

High Load Capacity: Reinforced lock bolts ensure reliable support.
Corrosion Resistance: Different coating options make it suitable for indoor and outdoor & Coastal environments.
Versatility: Suitable for horizontal and vertical applications, compatible with rubber support inserts for chilled water pipes.
Easy Installation: Large opening angle with anti-loss screws for efficient setup.

Part No.	D (mm)	Size (inch)	BOLT (mm)	B (mm)	b x s (mm)	Rec. Load KG	Qty Pack
IC12508022	22	1/2	M10	205	25 x 5.0	170	60
IC12508028	28	3/4	M10	215	25 x 5.0	170	60
IC12508035	35	1	M10	235	25 x 5.0	170	50
IC12508040	40	1 1/4	M10	265	25 x 5.0	170	50
IC12508048	48	1 1/2	M10	265	25 x 5.0	170	40
IC12508060	60	2	M10	265	25 x 5.0	170	35
IC12508075	75	2 1/2	M12	295	25 x 6.0	400	35
IC12508090	90	3	M12	295	25 x 6.0	400	30
IC12508100	100	3 1/2	M12	335	25 x 6.0	400	30
IC12508115	115	4	M12	335	25 x 6.0	400	25
IC12508140	140	5	M16	335	40 x 6.0	600	20
IC12508168	168	6	M16	385	40 x 6.0	600	15
IC12508220	220	8	M16	475	40 x 10.0	1100	10
IC12508273	273	10	M16	525	50 x 10.0	1200	5
IC12508323	323	12	M20	585	50 x 12.0	1500	4
IC12508355	355	14	M20	615	50 x 12.0	1500	4
IC12508406	406	16	M20	665	60 x 16.0	2200	2
IC12508457	457	18	M20	715	60 x 16.0	2200	2
IC12508508	508	20	M20	765	60 x 16.0	2200	1
IC12508610	610	24	M20	885	60 x 16.0	2200	1

Note: Hot-dip galvanized and stainless steel options are available on request.